S&T HEAT EXCHANGERS Part II:

Main Parts, Conical Transitions, Shell & Heads, Nozzle Design.

STUDY NOTES

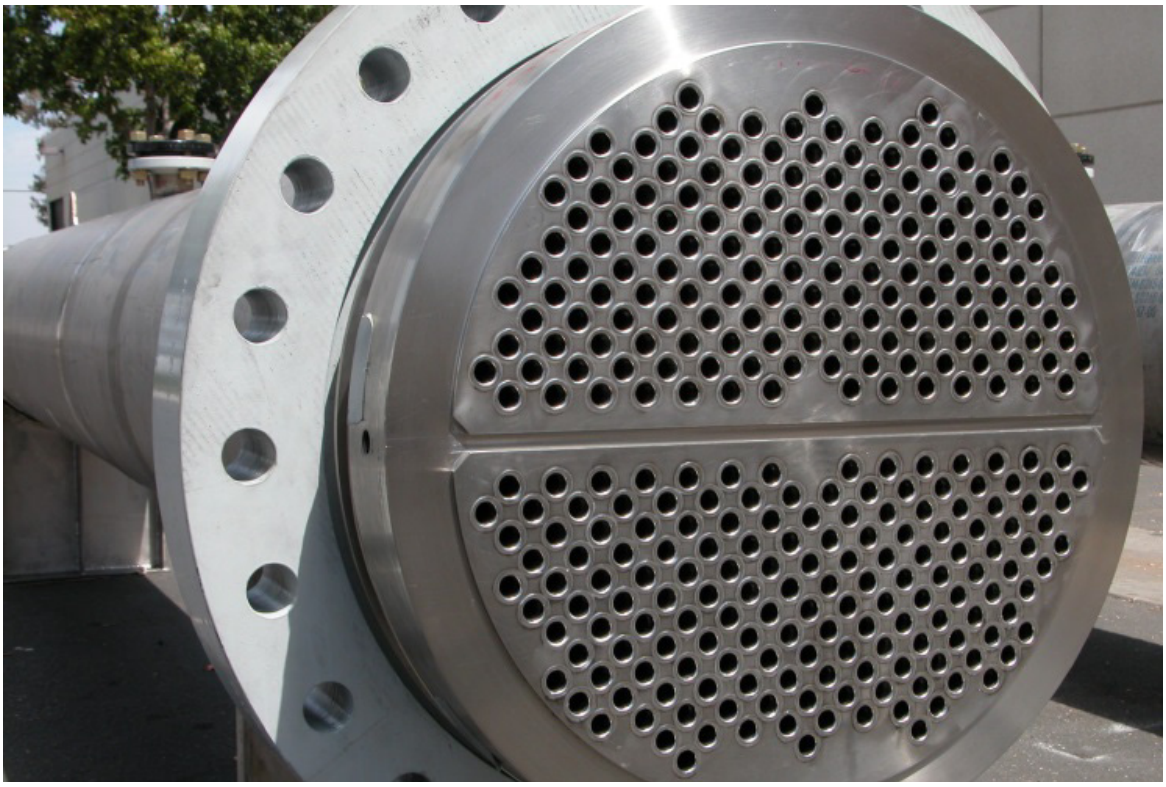

arveng
training & engineering

Instructor: Javier Tirenti

training@arvengconsulting.com

www.arvengconsulting.com

Table of contents

Introduction

There are many different applications that are covered by each type of heat exchanger, but in general, they are used to recover heat between two fluid streams in a particular process plant.

The term *heat exchanger* encompasses all devices used to transfer energy from one fluid to another. Some examples of this group are: radiators, water heaters, refrigeration batteries, evaporators, steam generators, etc.

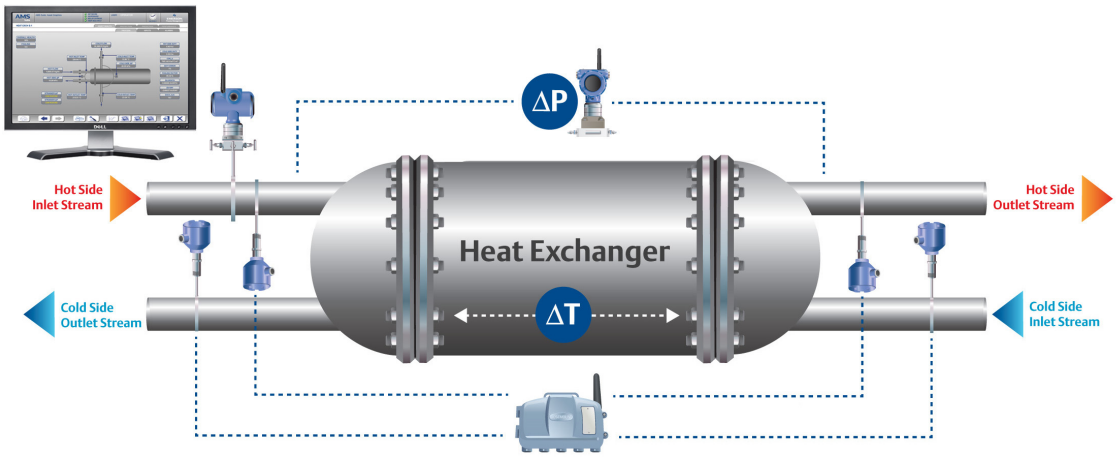

Classification

The more general classification that can be done for heat exchangersis according to the type of heat transfer method between the fluids. Following this criterion, heat exchangers are divided into two groups:

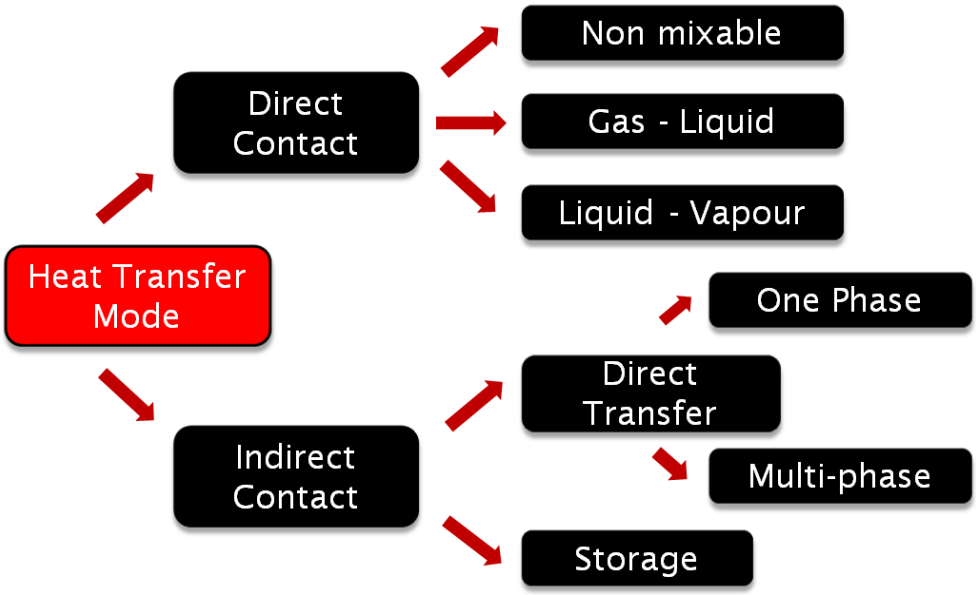

Direct contact heat exchangers, also known as mix exchangers, are devices where both fluids undergo a complete physical mixture.

Among others, cooling towers and mix condensers belong to the direct contact heat exchangers group.

On the other hand, **devices in which heat transfer takes place through a flat or cylindrical surface are called indirect contact exchangers**. There is a barrier that physically separates the two fluid flows, thus there being no possibility of direct contact or contamination between such fluids, except in case of damage of the separation barrier.

Examples of this type of heat exchanger are shell and tube exchangers, double tube exchangers and plate heat exchangers.

On the other hand, according to their type of construction, exchangers are classified as:

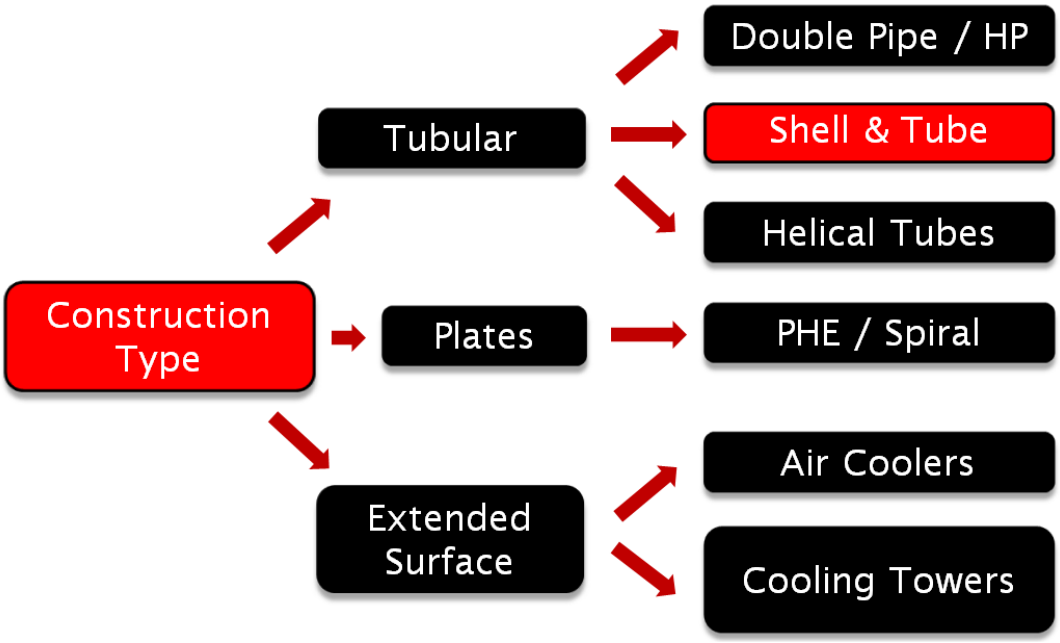

In multi-tubular or shell and tube heat exchangers, it is usual to combine the above classification to another based on the number of times each particle of the fluid travels the entire exchanger length, a process called a "pass".

In addition to their type of construction, **tubular exchangers are often classified based on the relative direction flow of both fluids. Thus, there are parallel and cross flow heat exchangers**, according to the direction of the streams inside the exchanger.

Additionally, tubular exchangers having same direction and sense are called co-current. When the flow circulates in opposite direction, the heat exchanger is operating in counter current.

Parallel flow heat exchangers mostly used in industrial plants are, among others: plate and frame, double tube, shell and tube and hair pin.

Air Cooler

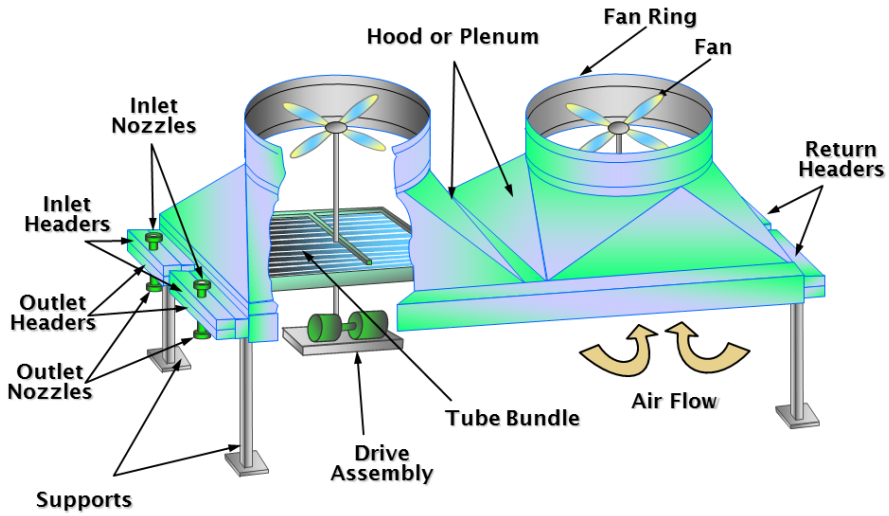

Double Pipe

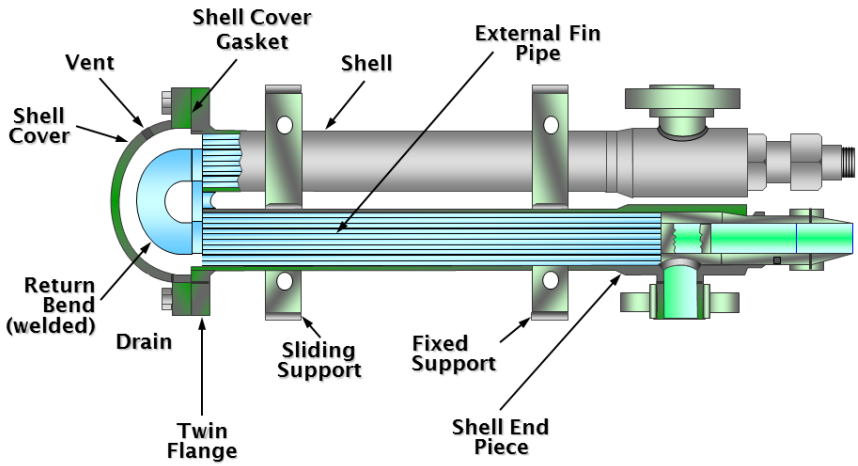

Plate and Frame

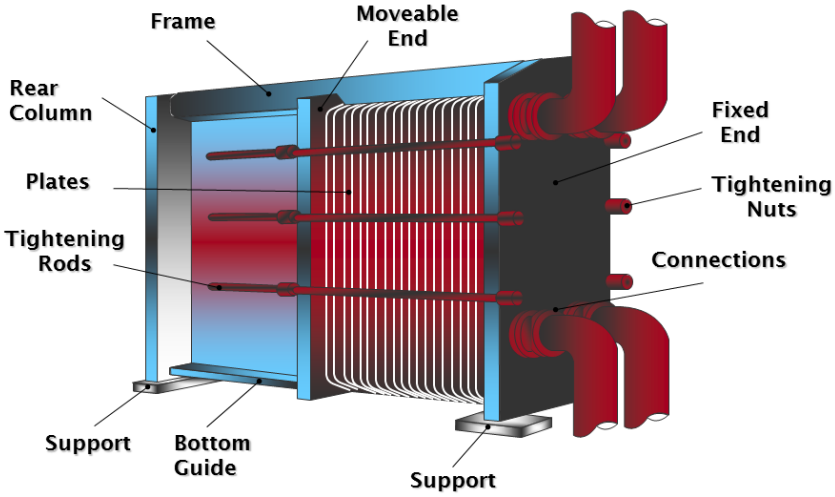

Design

To design a shell and tube heat exchanger it is mandatory to have the inputs indicated in the data sheet of the equipment. The data sheet is nothing more than a compilation of information obtained during the thermal study of the process in which the exchanger is included. With this information can then be determined the mechanical elements that will be designed individually.

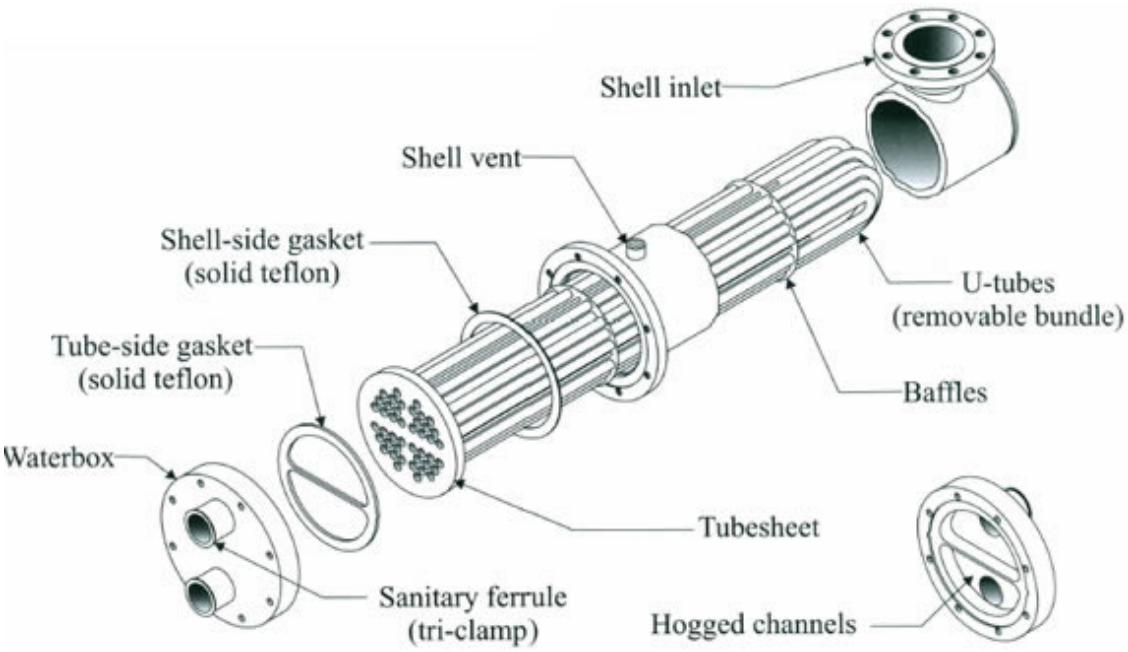

The design methods of the parts that could be included in a shell and tube heat exchanger will be described in the following chapters of this document. However, not every element described herein will be involved in the design of every shell and tube heat exchanger. Elements should be selected according to the needs and requirements specified in the data sheet. For example, this means that a TEMA heat exchanger type "NEN" will not require a floating head or torispherical head, elements that are also described in this document for the cases which do required them.

In general, for the calculation and design of the different components of heat exchangers, in this document the criteria set by TEMA code is followed, sometimes ASME code suggested design methods and less often HEI minimum requirements. This criterion is adopted in order to cover the widest range of possible applications, since TEMA is the more used code.

1. Terminology

1.1) Fluids

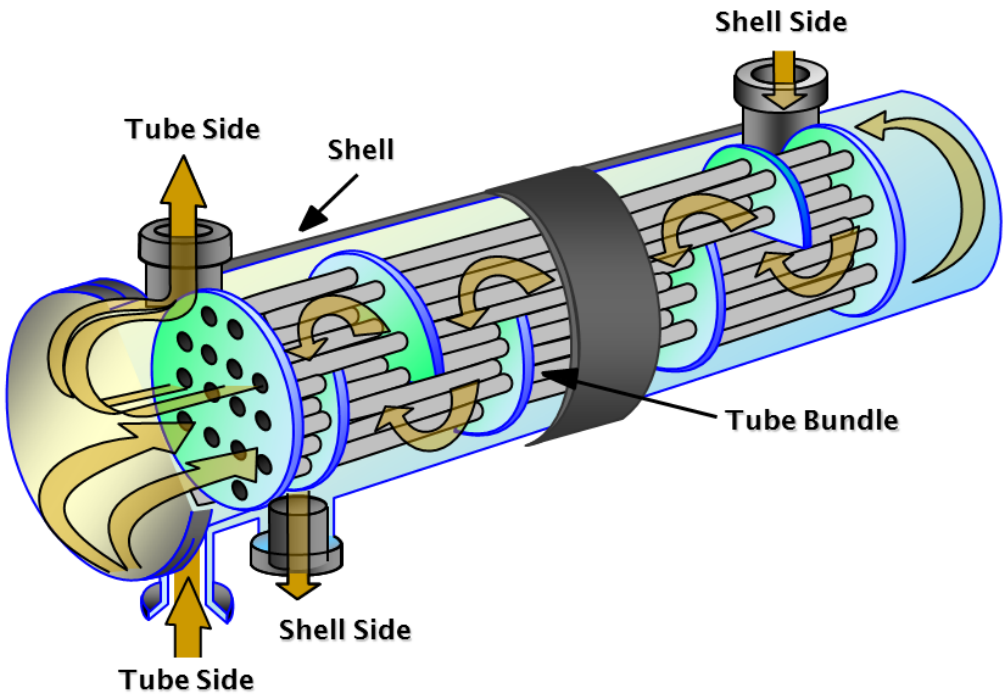

1.1.1) Tube side

The fluid flowing inside the tubes (that belong to the tube bundle) is called the tube side of a shell and tube heat exchanger.

1.1.2) Shell side

On the contrary, the fluid flowing inside the shell is called the shell side of a shell and tube heat exchanger.

1.2) Pressure

1.2.1) Internal Pressure

The difference between the operation (Po) and design pressure (Pd) is a safety margin. This margin exists because sometimes it is difficult to establish operation conditions with certainty. **If we need to design but only have operating pressure, a workaround could be as follows:**

If Po > 300 psi ⟶Pd = 1.1. Po.

If Po ≤ 300 psi ⟶ Pd = Po + 30 psi

Where Pd is the design pressure, and Po is the operating pressure.

When determining the design pressure (Pd), the hydrostatic head (pressure of the fluid column) should be considered, especially in vertical cylindrical vessels.

1.2.2) External pressure

If under operating conditions the equipment gets depressurized or operates under vacuum, at that moment the atmospheric pressure is acting outside the shell and tube heat exchanger.

At sea level, atmospheric pressure is 1 atm. According to the location (height above sea level) at which the equipment is to be installed, we should see the atmospheric pressure declining. To simplify the calculations, and always on the safe side, usually 1 atm external pressure is taken without considering the height above sea level.

Steam out or blanketing

When performing a steam out operation (used to clean the vessel) using high or medium steam pressure, steam can condense due to a temperature change and produce vacuum. Depending on the temperature of the steam used, it is advisable to calculate the equipment under external pressure due to vacuum.

1.2.3) Maximum allowable working pressure (MAWP)

MAWP is the maximum continuous working pressure that the vessel could operate, assuring that the equipment will not deform plastically.

Is MAWP the same as the design pressure? The answer is NO. Adopted thicknesses usually exceed the required thickness by calculation. This excess is what generates the pressure to jump up to the MAWP.

The MAWP is a consequence of over-thickness due to: commercial thicknesses, margin of safety and manufacturing methods.

When dealing with shell and tube heat exchangers, it is important to mention that many of the parts of this equipment face the effect of pressure, temperature or corrosion from both the tube side and the shell side. Since design conditions may be different for the tube side and for the shell side, the most critical condition should be always specified.

1.2.4) Test pressure (Pt)

The test pressure is commonly known as hydrostatic test pressure. This test is carried out once the heat exchanger manufacturing process is completed. This test consists in filling the equipment with water while it is subjected to pressure as indicated by the ASME code (to be discussed later).

1.3) Temperature

1.3.1) Minimum temperature

It is the minimum temperature at which membrane stress occurs due to an environmental or process condition. The client or process department must provide this information. If this information is not available and there are no

process requirements, we look for the historical minimum temperature of the site.

1.3.2) Minimum design metal temperature (MDMT)

MDMT is the minimum temperature that our material is able to resist against a brittle fracture. It is a property of the material.

1.3.3) Operating temperature (To)

It is the shell and tube heat exchanger temperature, considering normal operating conditions.

1.3.4) Design temperature (Td)

It is the temperature to be used in the design of the heat exchanger. Same as with the design pressure, this value is defined by the thermal design. When only the operating temperature is known, it could be estimated as follows:

- For fluids operating above 0ºC, the design temperature should be the greater of the following expressions:
    - To x 1,1
    - To + 15 º C
    - 65º C
- For fluids operating at a temperature of 0º C or lower, it should be simultaneously specified the minimum and maximum expected temperature, the latter being not less than 65º C for the shell side. This consideration is made in order to consider the hot air flow during the drying operation, after the hydrostatic test.

1.4) External loads

1.4.1) Wind, snow and earthquake

These external conditions are imposed according to the place of installation of the equipment. Ideally, a detailed study of the legislation of the place shall be carried out; misreading values represent a lot of man-hour rework.

To analyze combined actions is essential to review the requirements of the client.

1.4.2) Cyclic loading

If a shell and tube heat exchanger or heat exchanger has a requirement of cyclical service, the equipment should meet the requirements of fatigue analysis of Div.2. Does this mean that the entire shell and tube heat exchanger should be designed according to the Div.2? NO. The vessel can be design according to Div.1, but must also meet the requirements for fatigue analysis according Div.2.

An alternative to the fatigue analysis according to the provisions of Part 5 Div.2 is FEA. This latter method is being used more and more nowadays.

1.5) Other definitions

1.5.1) Design stress (S)

It is the maximum stress value that a material, that forms part of a shell and tube heat exchanger, can undergo in normal operation. Its value is based on 25% of the final tensile strength of the material.

1.5.2) Joint efficiency (E)

Joint efficiency can be defined as the reliability that you can obtain from welded joint. This coefficient can be values smaller than 1, and it can be said that the joint efficiency is a way of reducing the allowable stress of the material. Therefore, the joint efficiency depends on the level of non-destructive examination (NDE) and the category and type of the weld we use for joining two pieces of equipment.

2. Shell and tube heat exchangers

A heat exchanger is a device in which two fluids, one through the tube side and the other through the shell side, circulating at different temperature conditions, exchange heat through the walls of the tubes, without direct contact between them.

There are different types of shell and tube exchanger, one of the most used classifications is shown below:

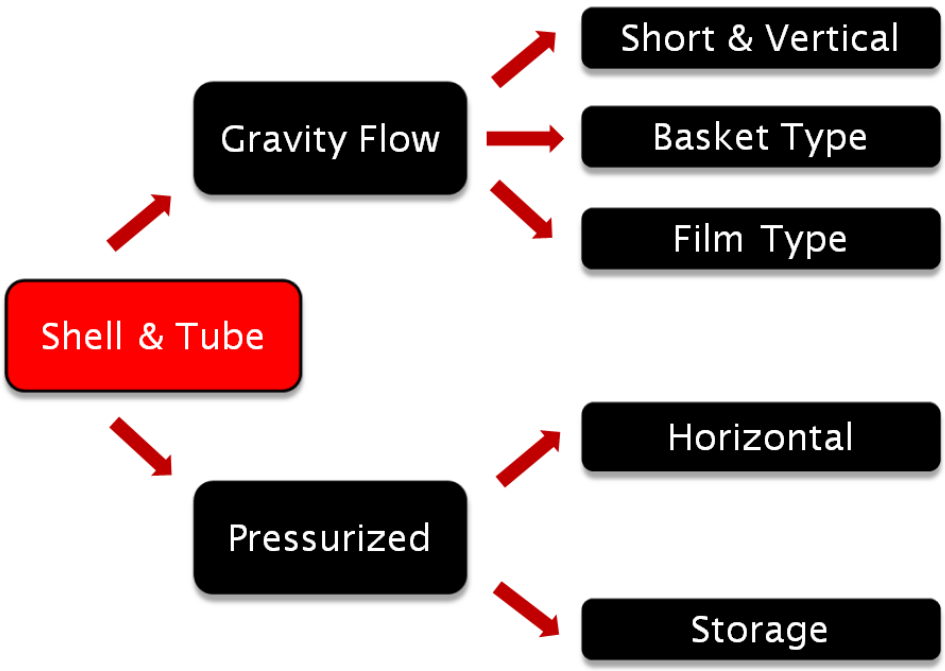

The most widely used shell and tube heat exchangers in industrial processes are horizontal and pressurized circulation. Therefore, this type of heat exchanger will be studied in later chapters.

Horizontal shell and tube heat exchangers can take several configurations. Different alternatives, geometries and configurations are described in the following chapters.

2.1) Parts of heat exchangers

The name given to each of the components of a shell and tube heat exchanger is provided in the figures shown below.

Then four figures presented below correspond to the most frequently used shell and tube heat exchangers. Schemes refer to different positions, which are listed in the reference table shown after the exchanger figures.

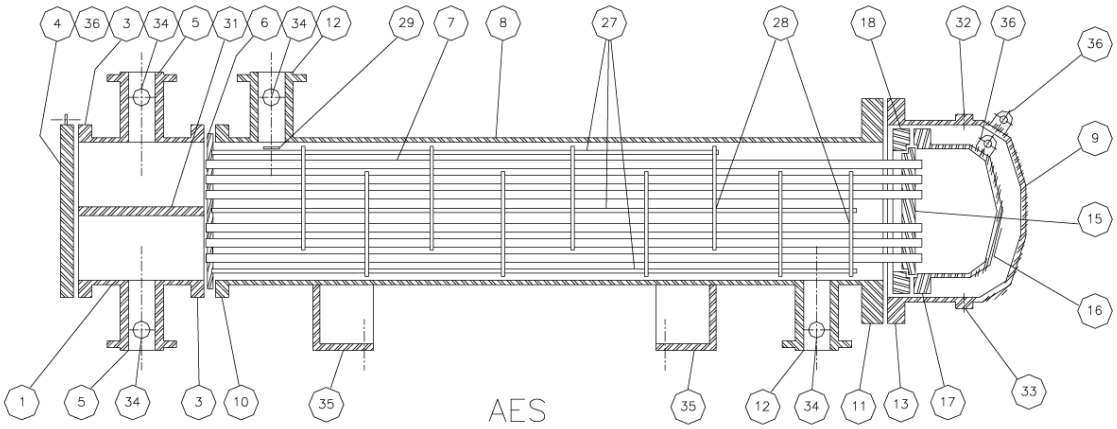

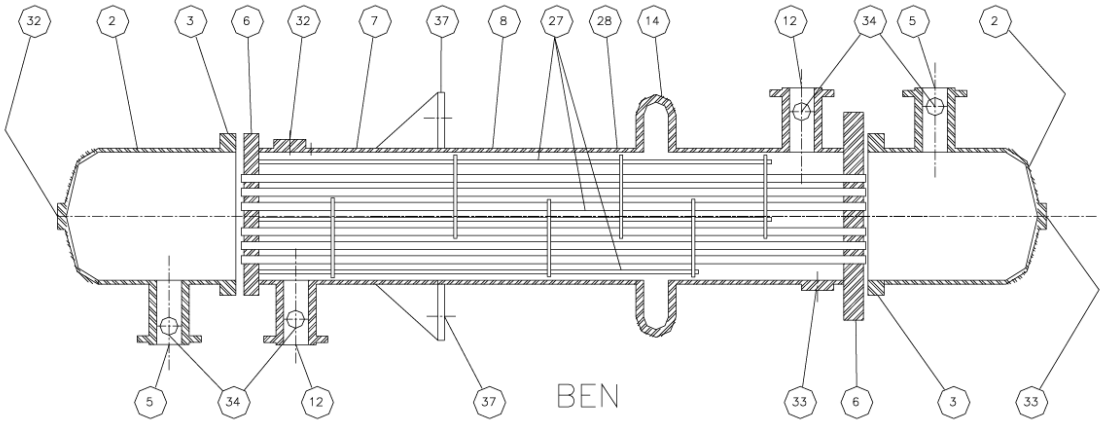

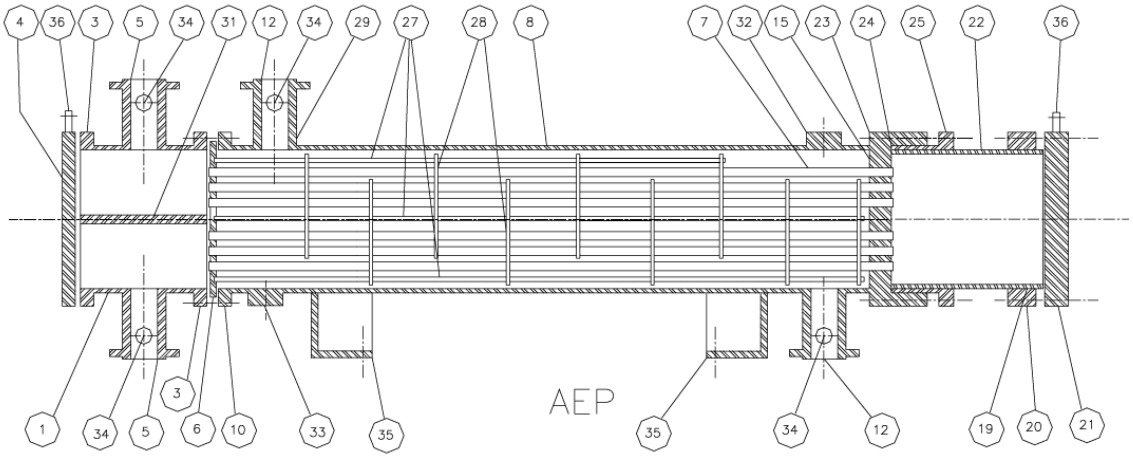

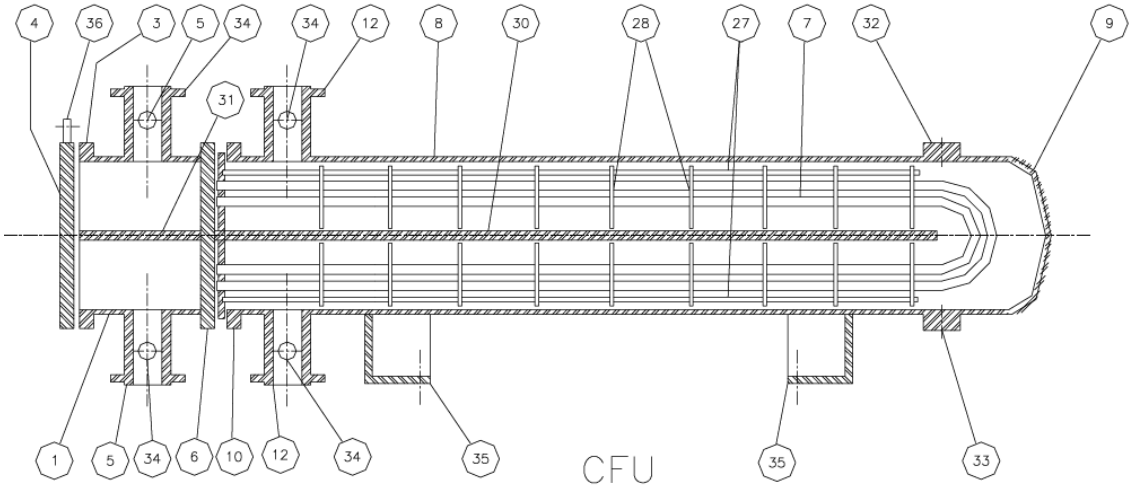

1. Stationary head with flat cover	20. Sliding flange
2. Stationary head with elliptical cover	21. Floating head flat cover
3. Flange of stationary head	22. Floating head shell
4. Flat cover of stationary head	23. Gasket box
5. Stationary head inlet nozzle	24. Gasket
6. Fixed tubesheet	25. Box counter flange
7. Tubes	26. Sealing ring
8. Shell	27. Tie rods and spacers
9. Shell head	28. Transverse baffles
10. Shell flange mating tubesheet	29. Impingement plate
11. Shell flange mating shell head	30. Longitudinal baffle
12. Shell inlet nozzle	31. Partition pass plate
13. Shell head flange	32. Shell flange mating shell head
14. Expansion joint	33. Shell head flange mating shell
15. Floating tubesheet	34. Instrumentation nozzle
16. Floating tubesheet head	35. Saddles or supports
17. Floating tubesheet flange	36. Lifting device
18. Floating tubesheet counter flange	37. Support brackets
19. Floating tubesheet backing ring	

2.2) Types of heat exchangers

2.2.1) Fixed tubesheet

This kind of exchanger features two fixed plates at both ends of the tube bundle.

Advantages: its fabrication is the most economical of all types, minimizing jacketed gaskets, thereby reducing potential leakage.

Disadvantages: the shell and outside of the tubes of the bundle cannot be mechanically cleaned or physically inspected. **For significant temperature gradients, it presents structural problems, caused by differential thermal expansion between the shell and the tube bundle**

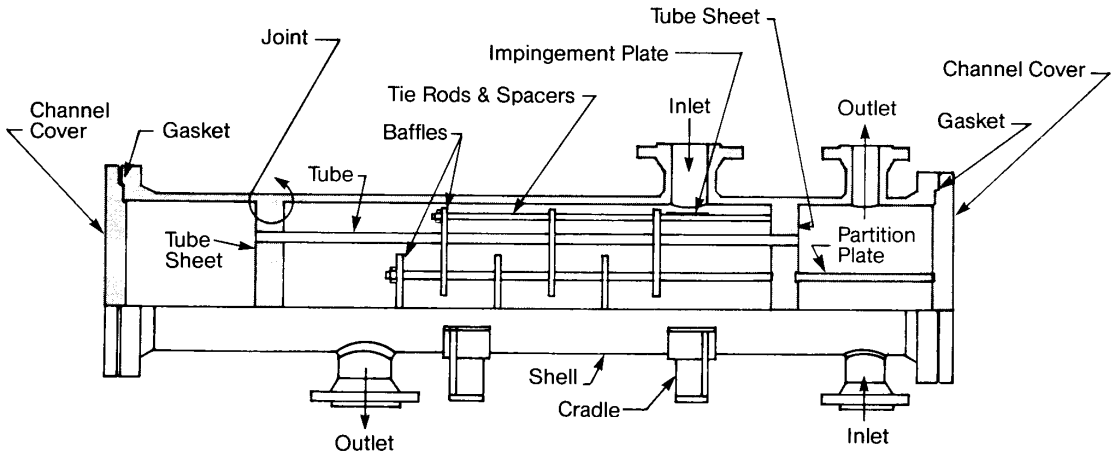

2.2.2) U tube

In this case, **there is only one tubesheet anchoring all tubes that are U-shaped. Thus, the fluid returns to the stationary head.**

Advantages: this kind of exchanger **can handle high pressure and temperature fluids in the tube side**. Another positive aspect is its ability to freely absorb thermal expansions at low cost.

Disadvantages: **it is difficult to mechanically clean the internal part of the tubes.** Moreover, the number of passes in the tube side is limited.

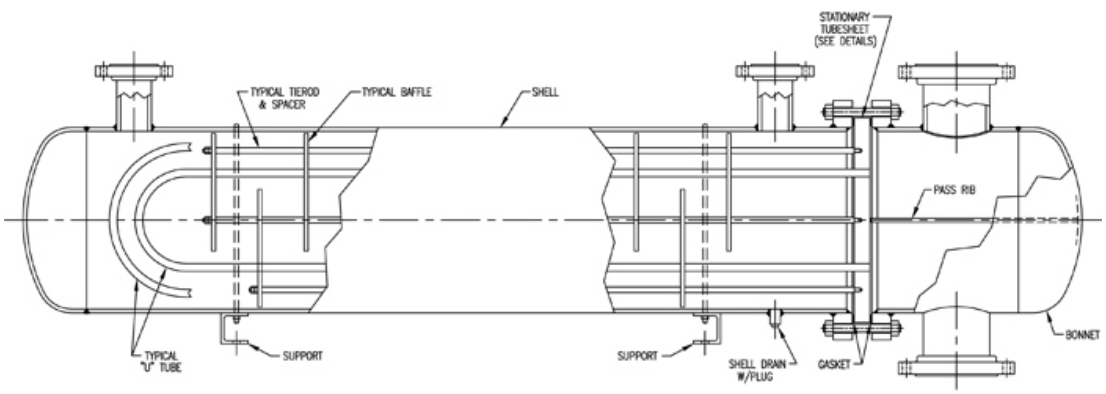

2.2.3) Floating tubesheet

These exchangers are a mixture of the two presented above. **Although the tubes are not U-shaped, the fluid returns to the stationary head due to the floating head that is design at the end of the tube bundle.**

Advantages: **this configuration is the best option for inspection, maintenance and repair.** It eliminates differential thermal expansion effects between the tube bundle and the shell, as a result of the free movement of the floating head.

Disadvantages: **the manufacturing cost is the highest of all configurations.** Due to the numerous jacketed gaskets present, it is not the best option for toxic or hazardous processes.

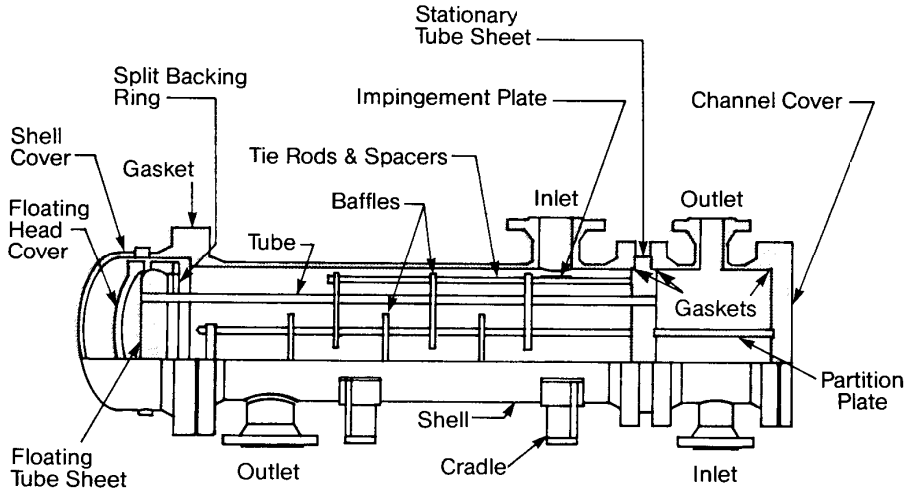

2.3) Main components

2.3.1) Shell

The shell is a cylindrical body constructed from one or more pieces, obtained from a rolled plate or a seamless tube, containing the tube bundle. The fluid bathing the tubes and the tube bundle circulates inside the shell. It is one of the most important parts of a shell and tube heat exchanger, especially from the structural point of view.

2.3.2) Tube bundle

The tube bundle is a component formed mainly by tubes and baffles. This bundle is located inside de shell, following the same alignment. The function of the tubes is to transfer heat between the two present fluids. The baffles support the tubes, create turbulence and direct the fluid flowing outside the tubes.

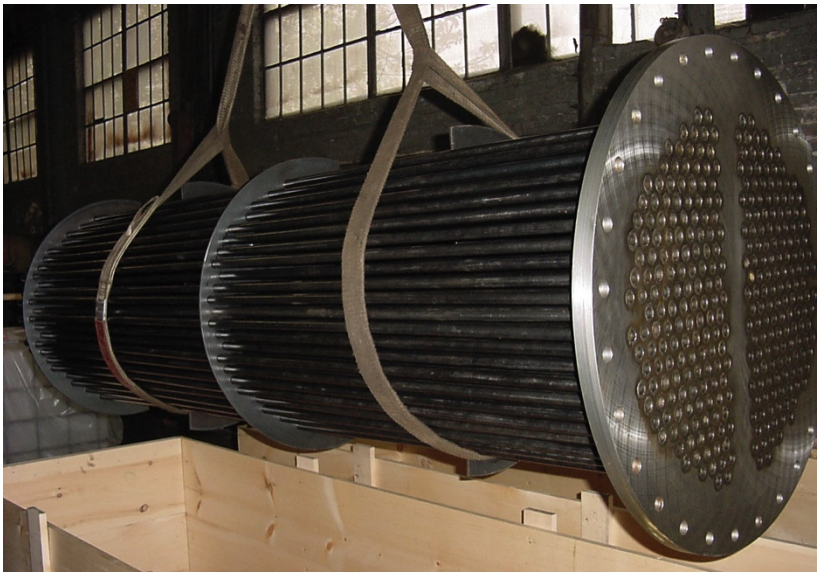

2.3.3) Tubesheet

The tube bundle ends in circular perforated plates called Tubesheets. Their main purposes are to divide the flow between the shell side and tube side flow and secondly to anchor all the tubes of the bundle.

Tubes cross the tubesheet from side to side inside the drilled holes; these tubes will be sealed against the tubesheet thru expansion or welding. The aim is to join both elements permanently.

2.3.4) Tubes

The function of the tubes is to transfer heat between the two present fluids Tubes are standard length, whose nominal diameter coincides with the outer diameter, and it is normally specified using the Birmingham Gauge system, known as BWG.

2.3.5) Stationary head

From a structural point of view, the stationary head is similar to the shell. **Its function is to receive the tube side fluid, distribute it in the different passes and collect it to send it outside the exchanger.**

2.3.6) Floating head

The floating head is formed by the floating tubesheet, aspherical head and a split backing ring the entire assembly bolted together. The purpose is returning the fluid circulating inside the tubes to the stationary head. The fabrication of floating heads is complex, requires many hours of machining and strict quality controls. Nevertheless, leaks can occur due to the large number of jacketed gaskets present.

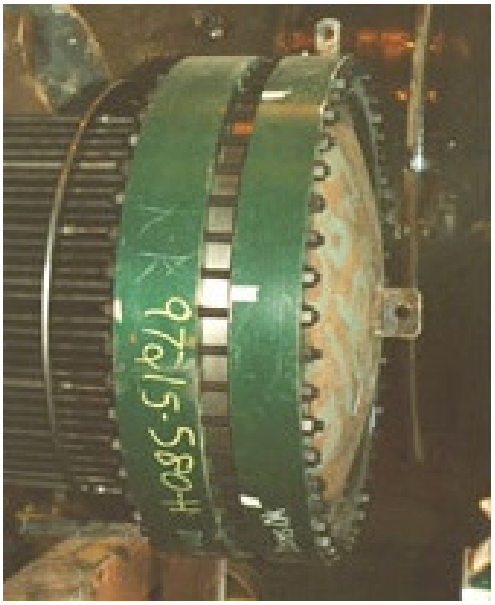

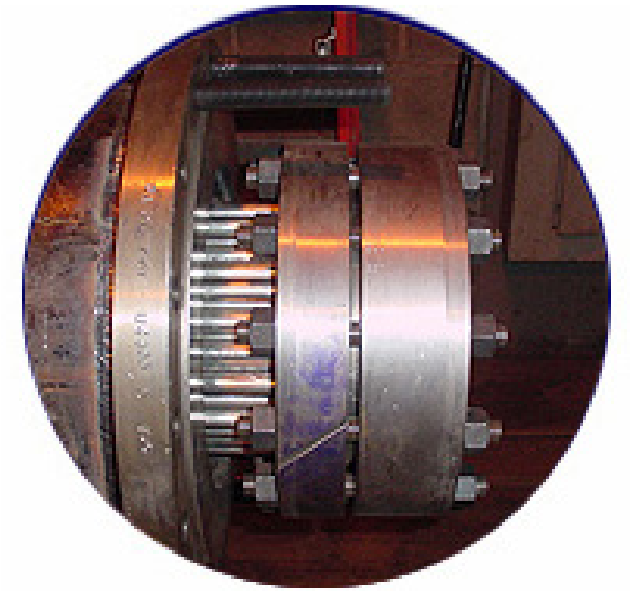

2.4) TEMA heat exchanger selection

Main parts of a shell and tube heat exchanger have been described previously; the question is, what kind of shell and tube heat exchangers are used for which applications and why?

The thermal designer is the person with the required ability to select, through well-defined criteria, the type of exchanger that provides the greater benefits to the process under study. Although the type of exchanger is defined in the thermal design stage, the mechanical designer must review the design, warning the thermal designer in case of clashes.

The thermal designer should work based on good practices and recommendations as shown below.

Which type of TEMA Heat Exchanger ?

Typical TEMA type heat exchanger	Description of TEMA type heat exchanger	Removable tube bundle	Tubes can be cleaned internally by rodding	Non-hazardous liquids & gases below 40barg		Non-hazardous liquids & gases above 40barg	Hazardous liquids and gases	No gaskets in contact with process side	Ability to resist thermal shock
				Below 190 °C	Above 190 °C				
AEW BEW	Externally sealed Floating tube sheet	Yes	Yes	Yes	No	No	No	No	No
AEP BEP	Outside packed floating head	Yes	Yes	Yes	Yes	Yes[2]	No	No	No
AEL BEM	Fixed tube sheet	No	Yes	Yes[1]	Yes[1]	Yes	Yes	Yes[3]	No
NEN	Fixed tubesheet, channel integral with tubesheet	No	Yes	Yes[1]	Yes[1]	Yes	Yes	Yes[3]	No
AEU BEU	U tube	Yes	No	Yes	Yes	Yes	Yes	Yes[4]	Yes
AET BET	Pull-through floating head	Yes	Yes	Yes	Yes	Yes	Yes	No	Yes
AES BET	Floating head with backing device	Yes	Yes	Yes	Yes	Yes	Yes	No	Yes

Notes: **1.** Expansion bellows may be required. **2.** Tube side only. **3.** Shell side only.
4. Shell side only if tube bundle welded into shell and therefore not removable.

11. Bibliography

This document has been compiled using different books and references. The most important ones are:

-Boiler and Pressure Vessel Code: ASME II, part D

ASME VIII, Division 1

-Pressure Vessel Design Manual – DENNIS MOSS

-Standards of Tubular Exchanger Manufacturers Association (TEMA)

-Power Plant Heat Exchangers from Heat Exchange Institute (HEI)

-API Standard 660.

-Process Equipment Design Brownell, Lloyd. E. 1959